Rotary Axis for CNC Mill (up to 8 inch Dia stock, up to 30" between chuck faces)

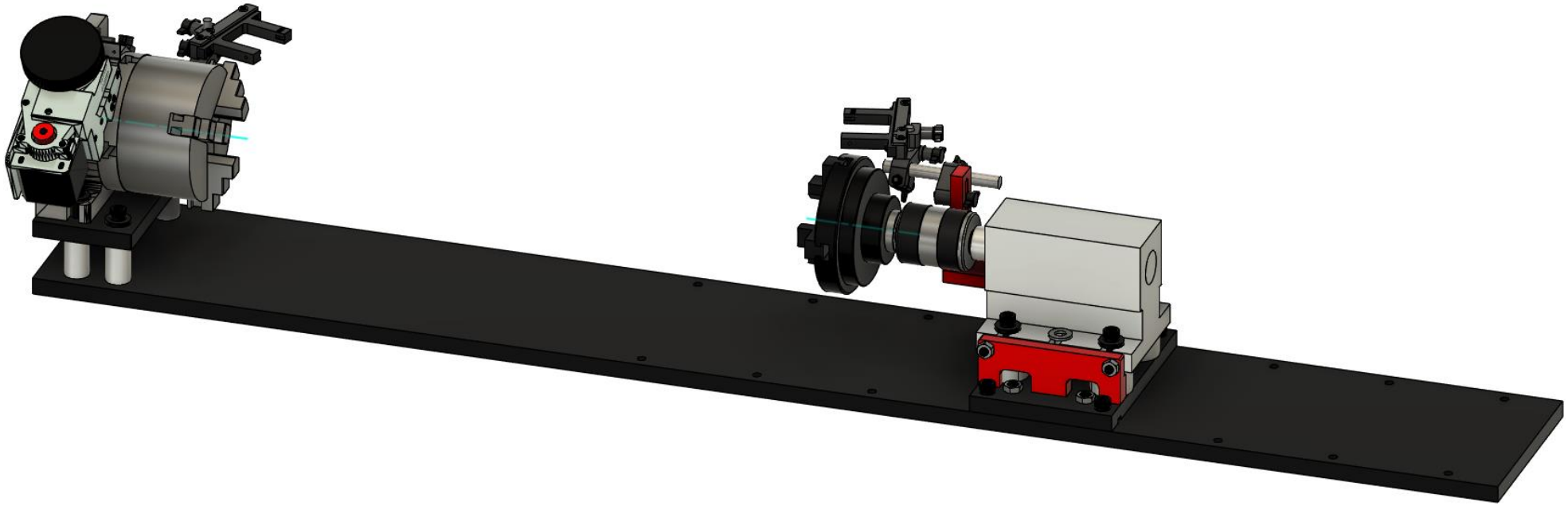

Headstock 4 inch Rotary table with stepper motor, 3 jaw self-centering 4 inch chuck

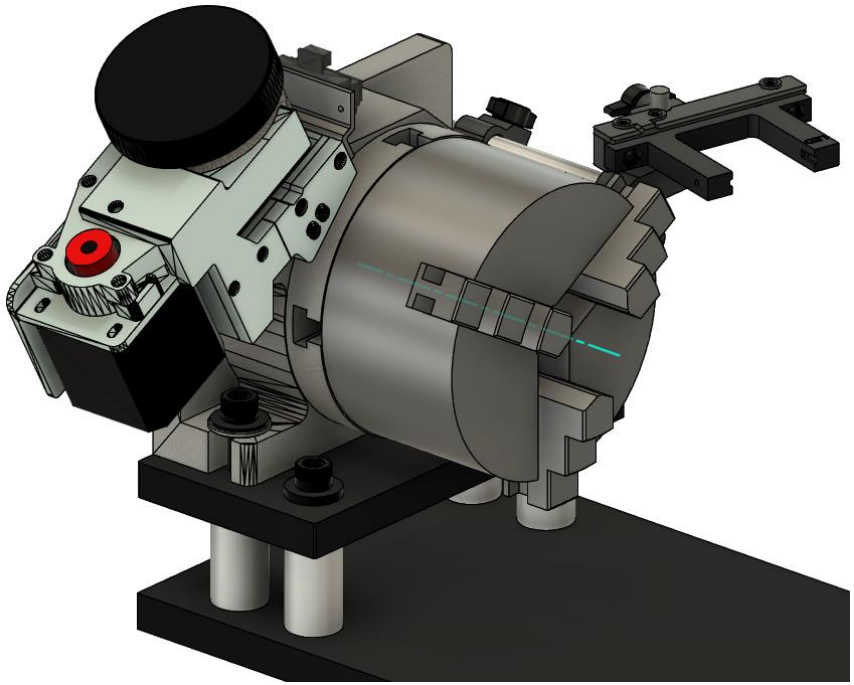

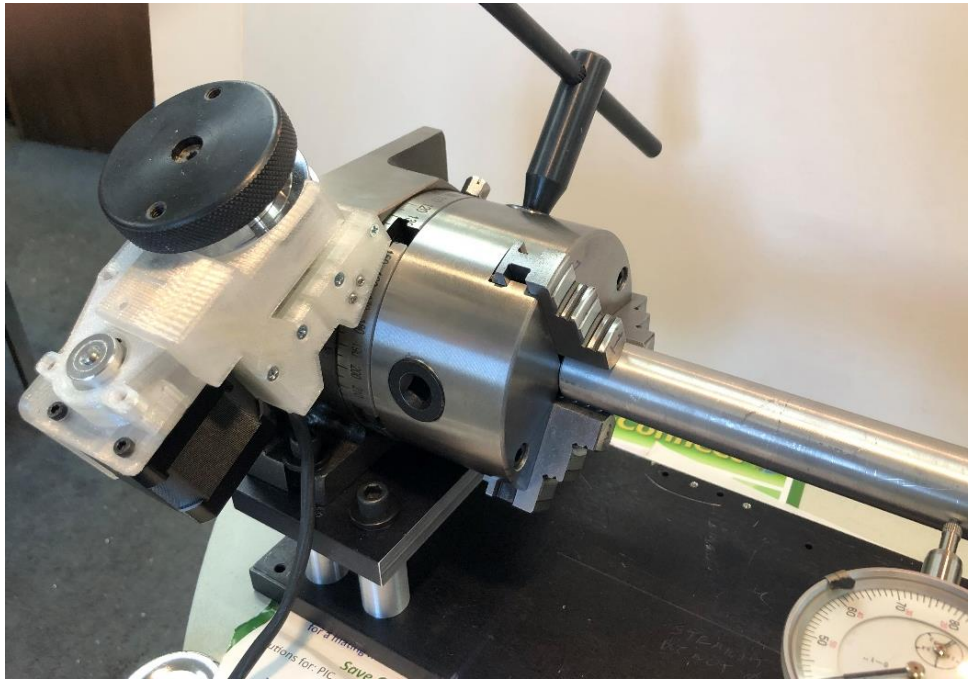

Tailstock Live center with 4 jaw self-centering 4 inch chuck

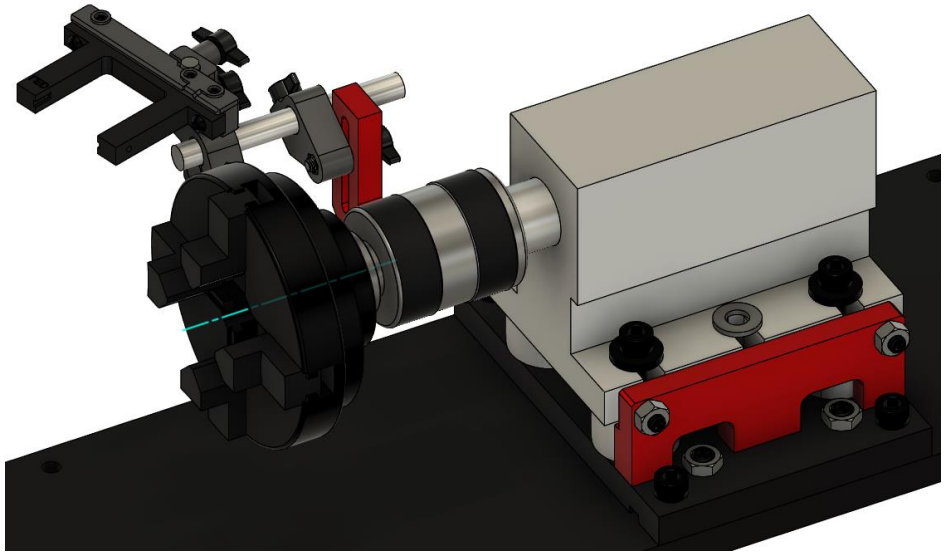

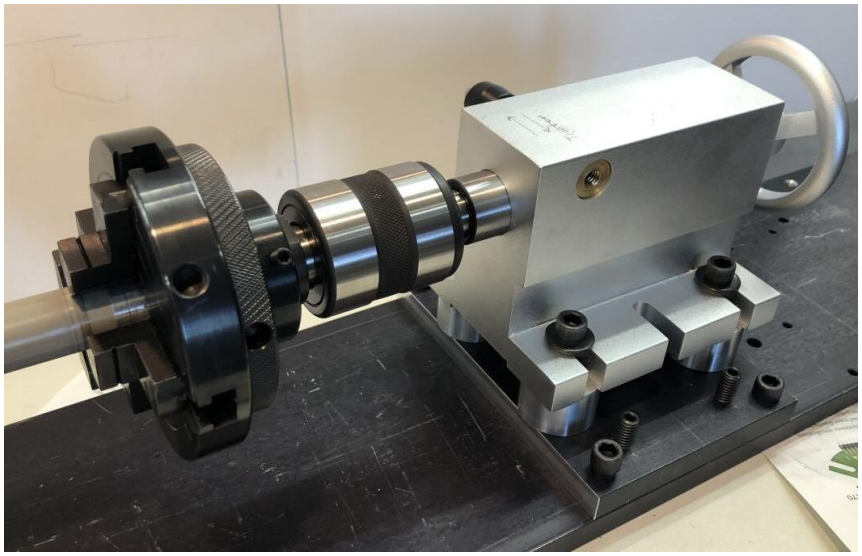

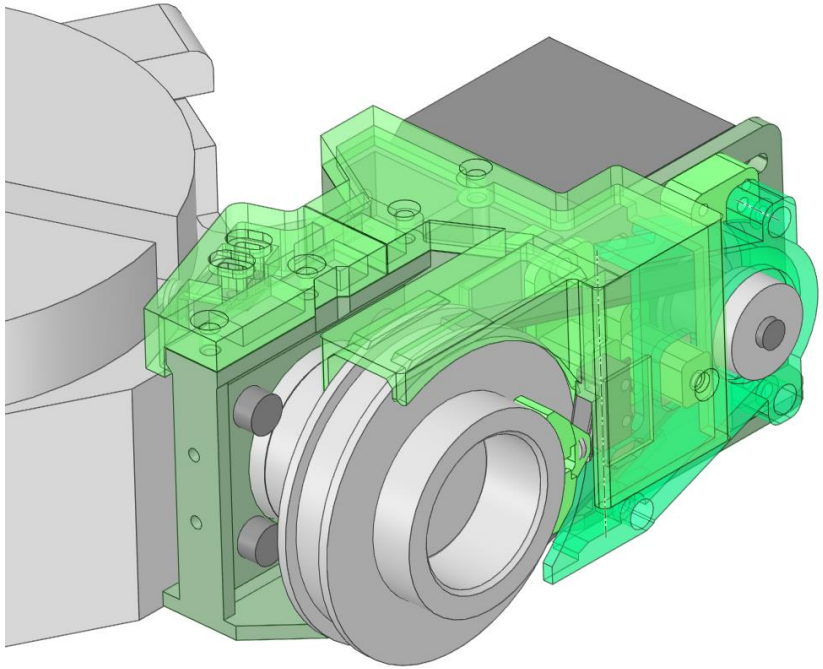

3D printed rotary table stepper mount

200 step per revolution stepper

20 tooth to 80 tooth belt link

0.0125 degrees per step

Home micro-switches on both table and worm drive

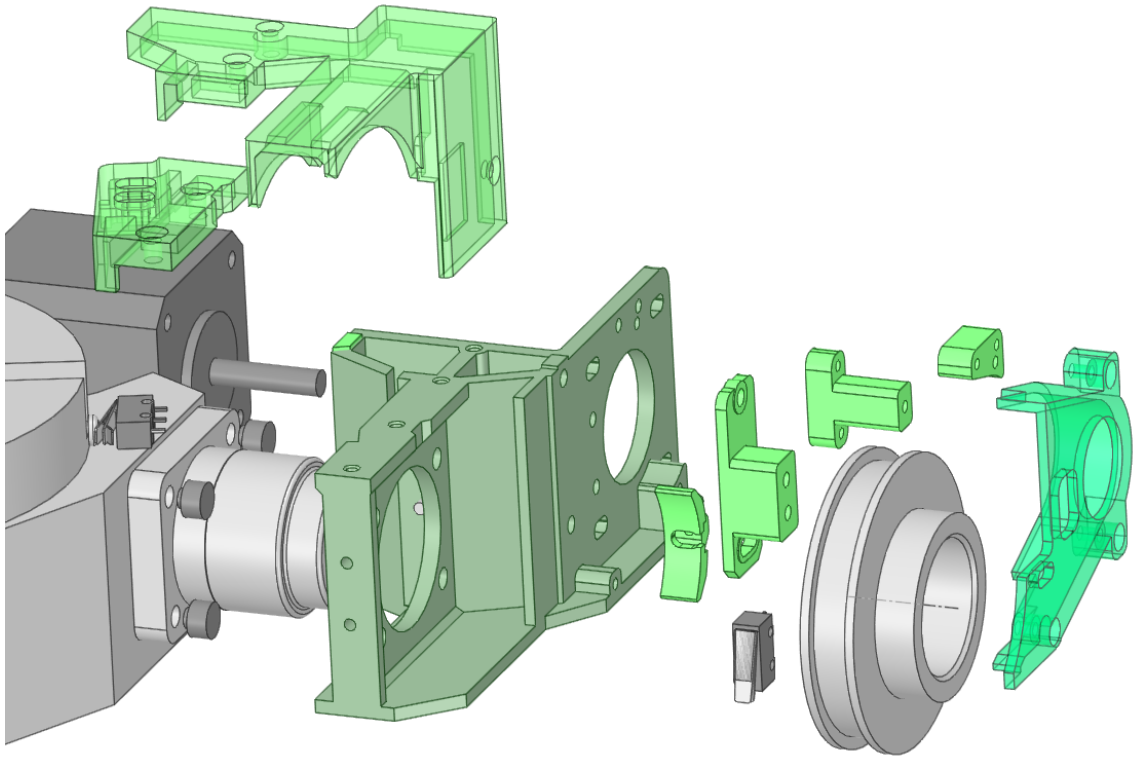

Controller Enclosure

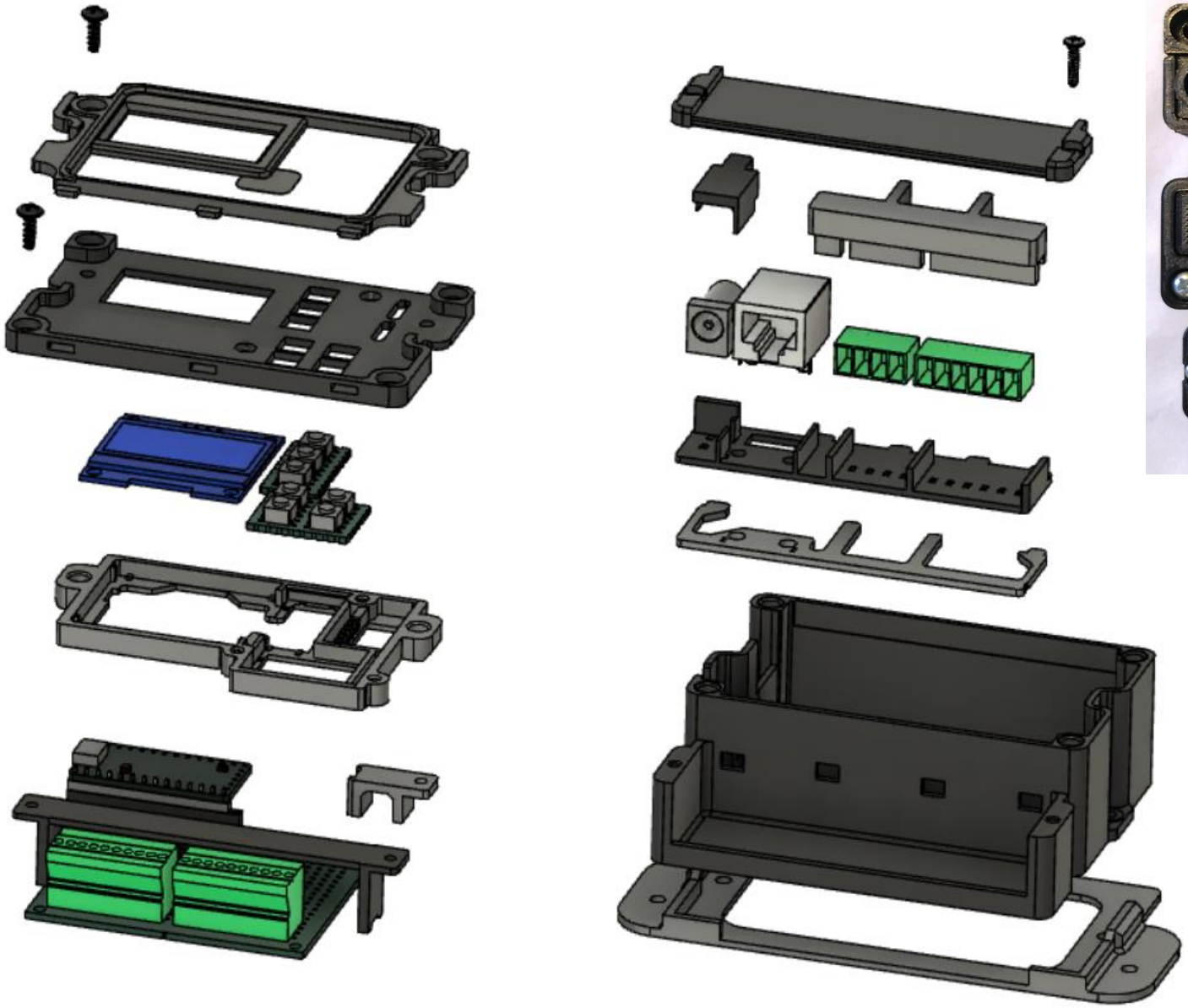

BOM (Bill of Materials)

Line	Qty	Type	Description	Part Num	Price
1	4	screw	5/16"-18 2" SocketHead Steel BlackOxide PartialThread	91251A591	$10.20(25)
2	5	screw	5/16"-18 1" SocketHead Steel BlackOxide PartialThread	91251A583	$14.37(50)
3	4	screw	Set 5/16"-18 3/4" FlatTip Steel BlackOxide	94105A580	$10.92(25)
4	1	screw	5/16"-18 1-1/2" SocketHead Steel BlackOxide	91251A587	$16.70(50)
5	2	screw	5/16"-18 3" SocketHead Steel BlackOxide PartialThread	91251A595	$8.01(10)
6	2	screw	5/16"-18 2-3/8" SocketHead Steel BlackOxide PartialThread	90044A429	$14.17(10)
7	1	screw	1/4"-20 1" SocketHead Steel BlackOxide FullThread	91251A542	$12.36(50)
8	9	screw	Thumb 10-32 1"Thread PlasticHead TwoArm	91185A911	$7.92(10)
9	6	screw	10-24 3/4" SocketHead BlackOxide	91251A245	$17.48(100)
10	4	screw	#6 1/2"L RoundHead Phillips SheetMetal Blunt Black Zinc-Plated Steel	92115A222	$8.85(50)
11	6	screw	#2 3/8"L Philips RoundHead ThreadForming Black Zinc-Plated Steel	92295A112	$9.80(100)
12	2	screw	Set 1/4-20 3/4"L FlatTip Steel BlackOxide	94105A539	$11.59(25)
13	2	screw	1/4-20 1-3/4" SocketHead BlackOxide	90044A124	$16.01(50)
14	4	nut	5/16"-18 1/2" 3/16"T Thin Medium-Strength Steel Zinc	94846A030	$6.57(100)
15	6	nut	10-32 1/4W 3/32H Narrow Steel Zinc	90760A150	$6.73(100)
16	2	nut	1/4-20 Steel Grade5 BlackOxide	95479A111	$5.57(50)
17	1	nut	5/16"-18 Thin SteelZinc Grade 2	91078A030	$4.44 (100)
18	2	nut	10-32 1/4W 3/32H Narrow Steel Zinc	90760A150	$6.73(100)
19	1	nut	10-32 1/4W 3/32H Narrow Steel Zinc	90760A150	$6.73(100)
20	8	washer	5/16 0.35ID 0.75OD 0.12T		
21	1	washer	5/16" 0.344"ID 0.688"OD SAE Steel Zinc	93012A112	$8.08 (100)
22	2	washer	3/8" 0.406ID 0.812OD 0.05-0.08Thick Steel Zinc	90126A031	$8.10(140)
23	4	spacer	1.250OD 0.315ID 0.850L	machined	
24	2	spacer	1.250OD 0.315ID 0.850L (1)	machined	
25	4	spacer	5/16 1.450L		
26	1	rod	3/8"Dia +/-0.006" Aluminum6061 1ft	8974K24	$2.55
27	2	rod	1/4"Dia +/-0.006" Aluminum6061 1ft	8974K22	$2.15
28	1	rod	3/8"Dia		
29	1	sensor	Optical Interrupter	OPB819Z	$6.08(1) DK
30	1	sensor	Optical Interrupter	OPB819Z	$6.08(1) DK
31	1	printPLA	TailstockSensorClampProx		
32	1	printPLA	TailstockSensorClampDist		
33	3	printPLA	Spacer 10-32 0.3"		
34	1	printPLA	Sensor-RearMount(Mirror)		

35	1	printPLA	SensorMountTop(Mirror)		
36	2	printPLA	Spacer		
37	1	printPLA	SensorProx-RearMountTop		
38	1	printPLA	SensorProx-RearMount		
39	1	printPLA	Clamp-Sensor2		
40	1	printPLA	SensorRodMount		
41	1	undef	RotaryTableTop		
42	1	undef	Pully		
43	1	undef	SharpSensor		
44	1	undef	SensorBracket	machined	
45	1	undef	RotaryTableMesh		
46	1	undef	Chuck		
47	1	undef	MountingPlate	machined	
48	1	undef	TailStock		
50	1	undef	Plate-TailStock	machined	
51	1	undef	Tailstock-SensorBracket	machined	
52	1	undef	Tailstock-SensorVerticalBracket	machined	
53	1	undef	Tailstock-SensorBracketNut	machined	
56	1	undef	LiveCenterChuckMount		
57	1	undef	Chuck-4Jaw		
62	1	undef	Plate-RotTableBot	machined	
66	1	undef	Table Stepper Mount	machined	

Dial Indicator with mounting